EAGLE 4.0 - LIBRARY | NAME: Switch_1 | DATE: 26.04.2013 19:32:32 | SHEET: 1/1
Devices

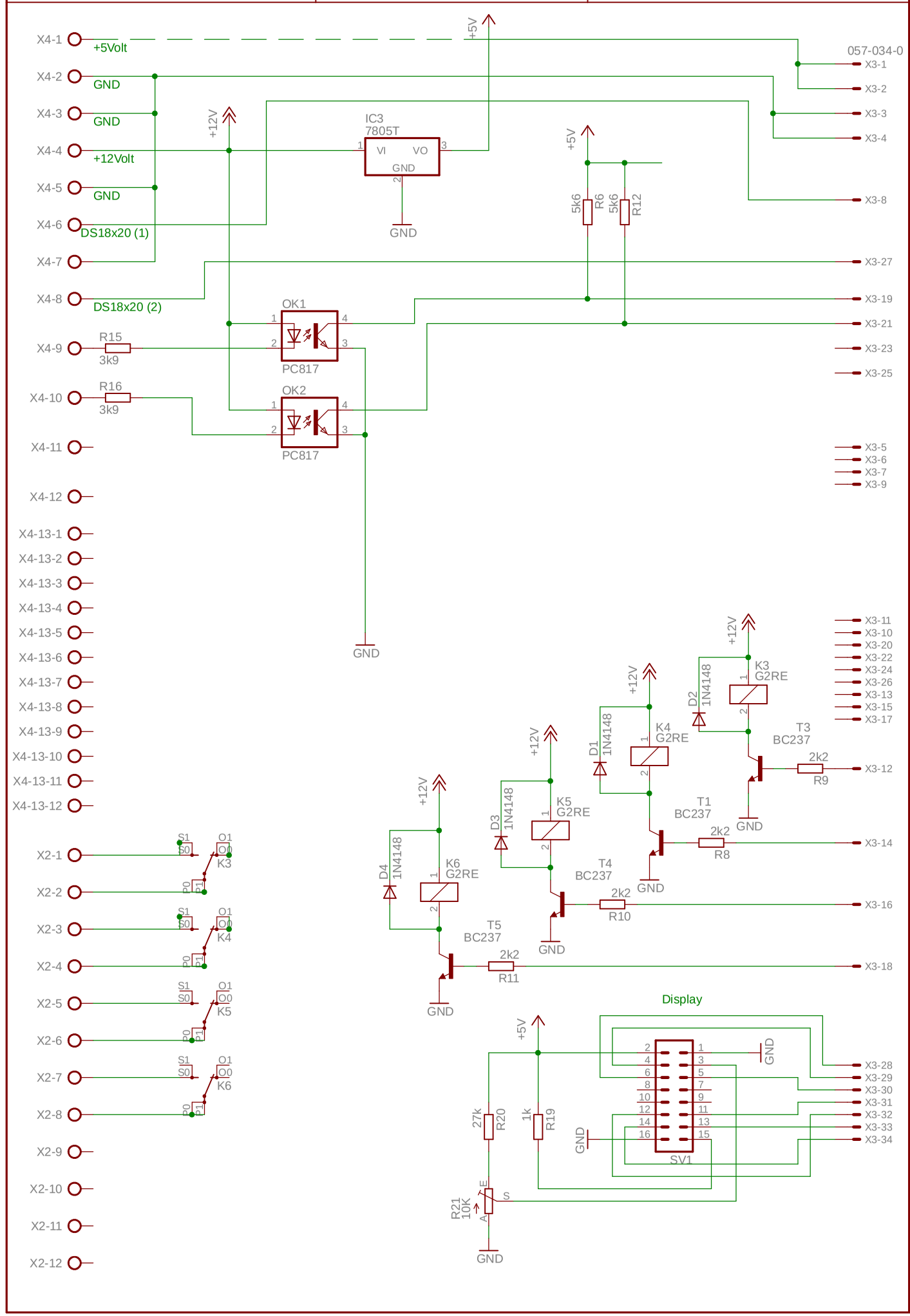
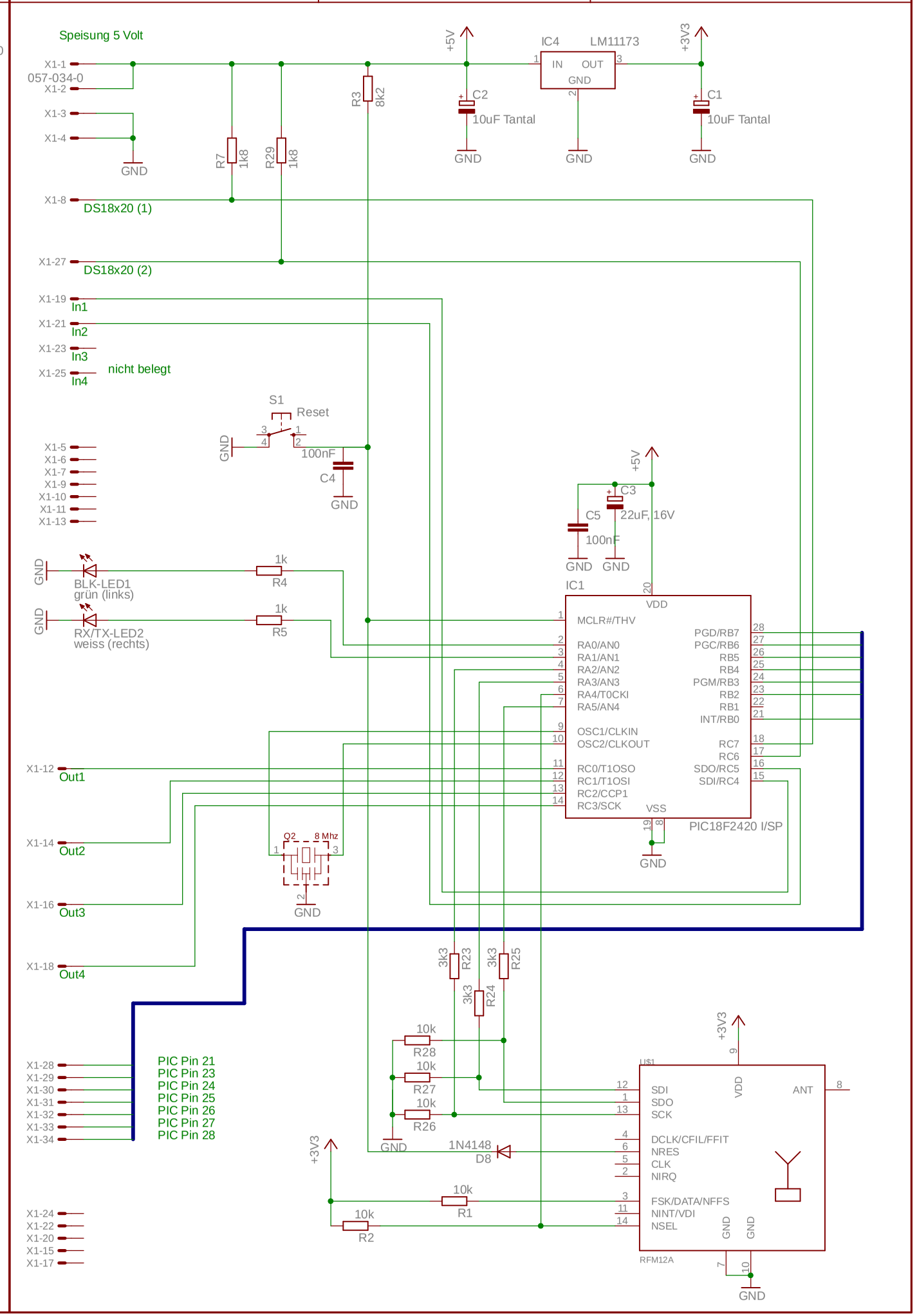
EAGLE 4.0 - LIBRARY | NAME: Switch_1 | DATE: 26.04.2013 19:32:32 | SHEET: 1/1
Devices