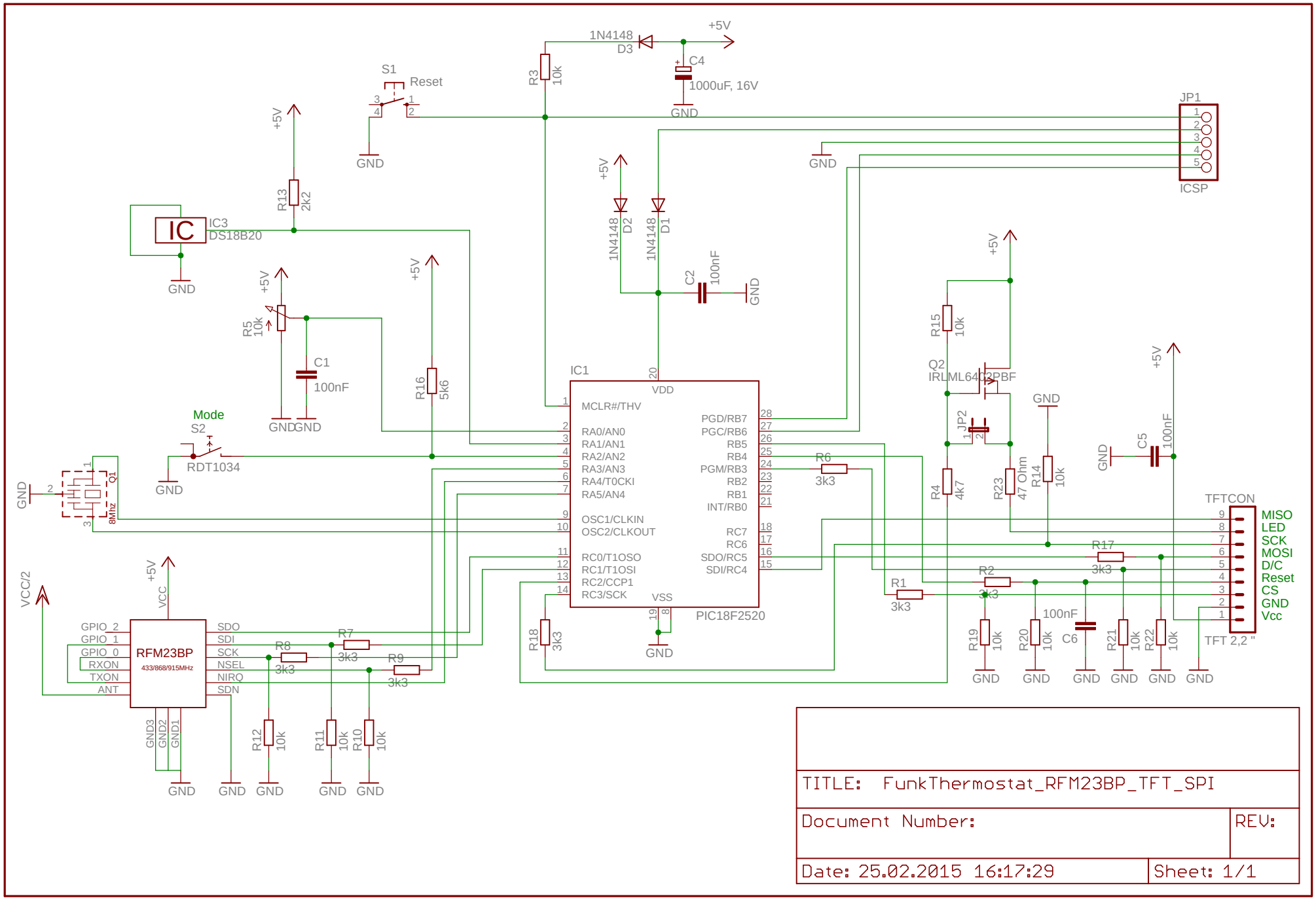

TITLE: FunkThermostat_RFM23BP_TFT_SPI

Document Number:

REV:

Date: 25.02.2015 16:17:29

Sheet: 1/1